This drawing is confidential and must not be reproduced or used without the consent of NONSTONE CO., LTD.

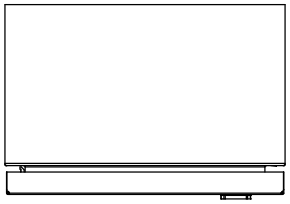

TOP VIEW

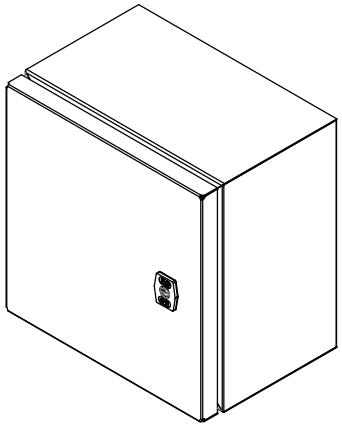

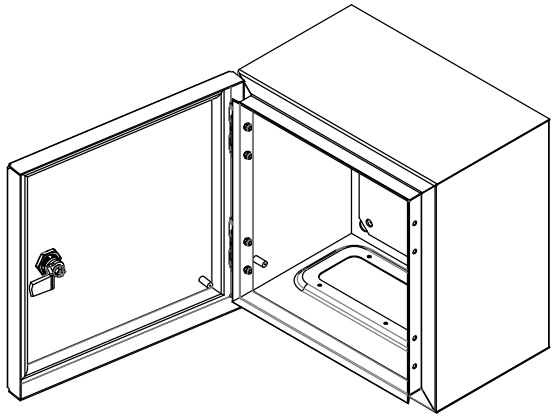

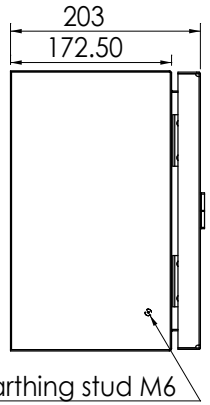

LEFT SIDE VIEW

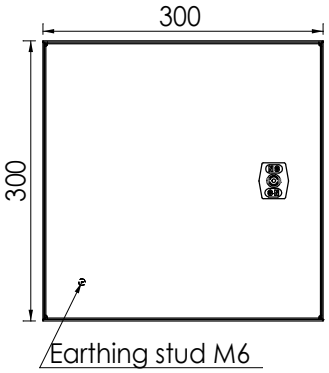

FRONT VIEW

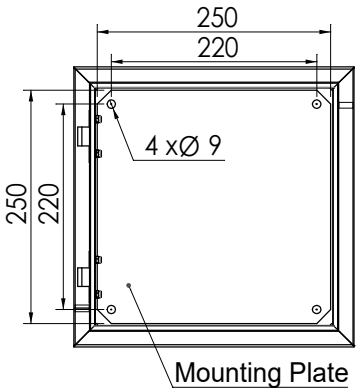

FRONT VIEW

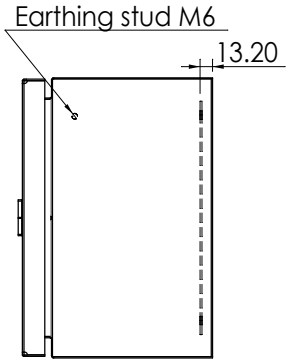

RIGHT SIDE VIEW

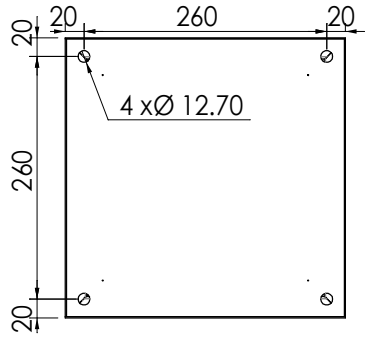

REAR VIEW

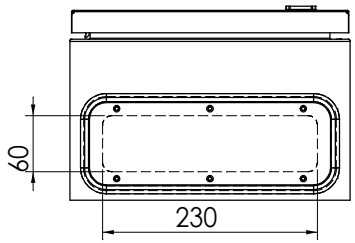

BOTTOM VIEW

NOTE :

NONSTONE			Drawing No.	ES 303020					
Customer Order No.			Author	Editor	Approve.	Customer	Nonstone	Order Qty.	
Customer Drawing No.		SCALE:1:8	F. S. H.			Work Order		Date	2020/12/2
Dimensions Unit	mm								

Data Subject to Change Without Notice.